Izerwaren Order number

- Heavy duty
- Satin stainless steel
- Polished stainless steel
- PVD coated = Life Time Finish Brass, Gold color

13.209 **Edge pull,**
Brass Diameter: 25 mm or 1 inch
Built in depth: 25 mm or 1 inch.
Black plastic end cap

#13.209; door edge pull,25 mm diameter, built in depth 25 mm material: brass

13.219 **Edge pull, heavy duty**
Ring model
304 stainless steel
Dimensions 110 x 24 mm
Round corners

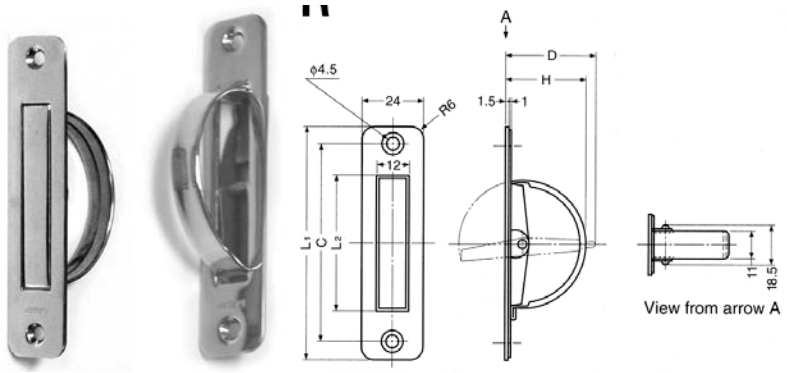

#13.219; 110 x 24 mm round corners; built in depth 30 mm; stainless steel

13.249 **Edge pull, light duty**
Single Hook model
304 stainless steel
Dimensions 100 x 20 mm
Square corners

#13.249; 100 x 20 mm; built in depth 23 mm; material stainless steel

13.229 **Edge pull, heavy duty**
Double Hook model
304 stainless steel
Dimensions 115 x25 mm
Square corners
(***not depicted***)

13.239 **Edge pull, medium duty**
Double Hook model
304 stainless steel
Dimensions 91 x 22 mm
Square corners

#13.239; 91 x 22 mm; built in depth 35 mm; material stainless steel

13.475 **Edge pull, medium duty**
pull model
4 x 3/4 inch; built in depth 1 5/8 inch;
material brass
Square corners
D EP00475U3

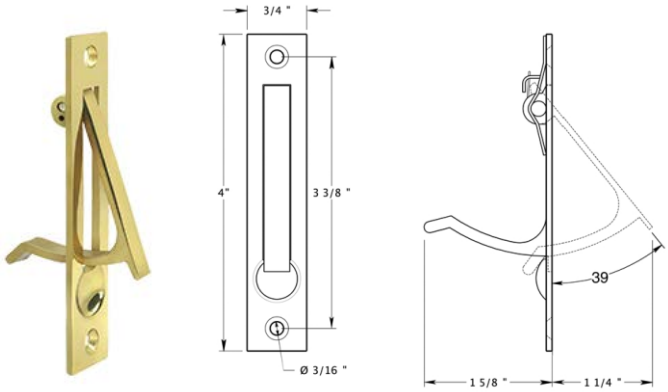

#13.475; 4 x 3/4 inch; built in depth 1 5/8 inch; material brass